AXOR

AXOR Urquiola
4-hole rim mounted bath mixer
Surfaces: **Chrome** Article Number: **11443000**

Description

product features

- consists of: 4-hole rim mounted bath mixer, hand shower, shower hose, shower holder
- projection 198 mm
- spray type mixer: normal spray
- spray type hand shower: Rain, RainAir (rain spray enriched with air), WhirlAir
- maximum pull-out length of hand shower: 1.10 m
- flow rate at 3 bar: 22 l/min
- min. operating pressure: 1 bar
- max. operating pressure: 10 bar
- scope of supply: handles, escutcheon, bath spout with diverter, non-return valve

Technology

Product image
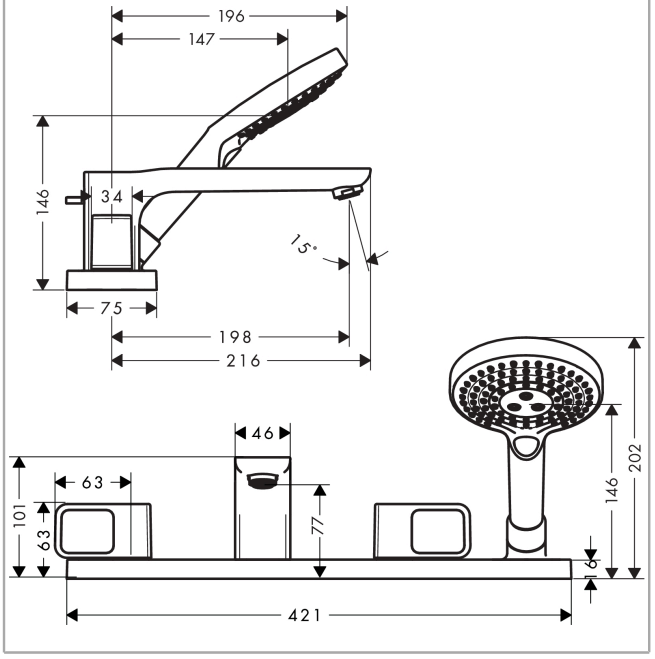
Scale drawing