AXOR

AXOR MyEdition
Single lever bidet mixer with push-open waste set
Surfaces: **Chrome/Mirror Glass** Article Number: **47210000**

Description

product features

- consists of: single lever bidet mixer, plate, waste set
- projection 121 mm
- plate of glass made of safety glass
- spray former: aerator with ball pivot
- normal spray
- flow rate at 3 bar: 5 l/min
- isolated water conduction
- suitable for continous flow water heaters
- push-open waste set (operation via pressure plug, for basins with overflow)

Technology

Air Power

Eco Smart

Product image
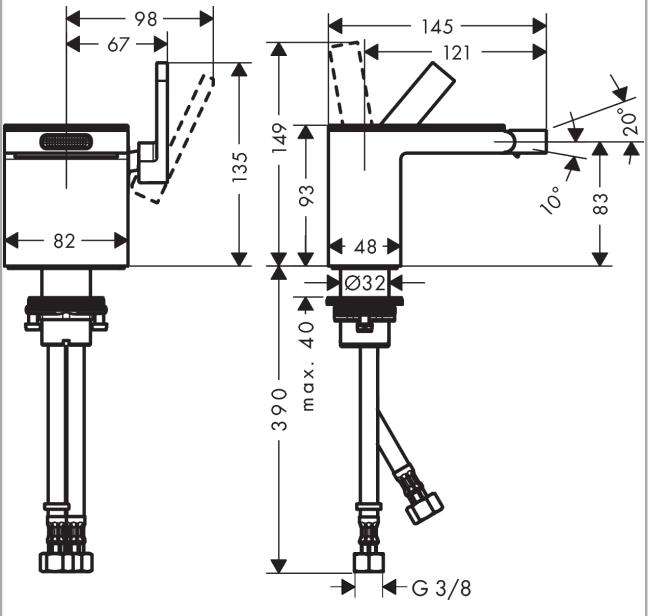
Scale drawing