AXOR

AXOR Edge
Single lever basin mixer 280 with push-open waste set - diamond cut
Surfaces: **Chrome** Article Number: **46031000**

Description

product features

- consists of: single lever basin mixer, waste set
- ComfortZone 280
- projection 180 mm
- normal spray
- flow rate at 3 bar: 4.6 l/min
- suitable for continuous flow water heaters
- push-open waste set (operation via pressure plug, for basins with overflow)
- material waste set: metal
- scope of supply: single lever basin mixer, connection hoses, fixing set, special tool, assembly instruction

Technology

Air Power · Eco Smart · Comfort Zone

Design awards

reddot award 2019
best of the best

GERMAN DESIGN AWARD WINNER 2020

Product image
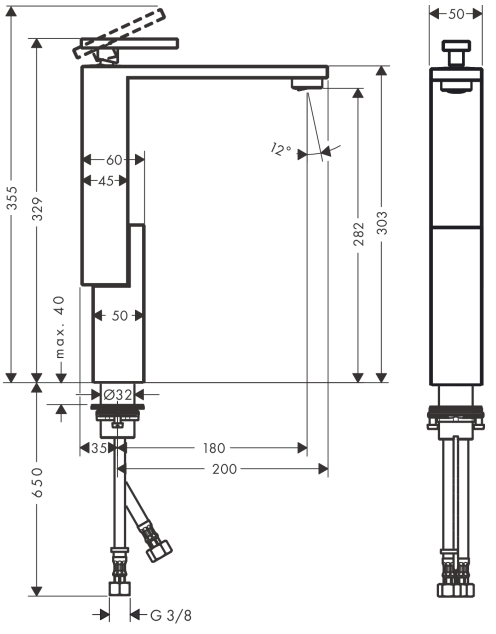
Scale drawing