SET LAUFEN PRO

Floorstanding WC combination

82495.5

TECHNICAL DATA

Order no.	82495.5
Certified to	EN 997, EN 33
Specification	Washdown for 5,9/3-l-flush lenght 700 mm, ceramic height 460 mm Charge 000 – 2 fixing holes, without lateral holes
Special specification	Charge 204 – 4 fixing holes, without lateral holes Charge 231 – 2 fixing holes, with lateral holes
Outlet	horizontal VARIO, vertical 70 - 305 mm
Weight	32,0 kg
Accessories excl.	Charge 000/204 – Cistern, order no. 82695.1, 82695.2 Charge 231 – Cistern, order no. 82695.3, 82695.5 Seat 89295.0 Seat and cover, order no. 89195.0, 89295.1, 89395.2 Seat and cover with automatic lowering system, order no. 89195.1, 89395.8
Mounting acc. incl.	Charge 000/231 – 1x Fixing set, order no. 89175.7 Charge 204 – 2x Fixing set, order no. 89175.7
Mounting acc. excl.	for VARIO-outlet 70 - 205 mm LAUFEN-connection, order no. 89009.2 for VARIO-outlet 220 - 305 mm only LAUFEN-connection, order no. 89902.5
Colours	see colour table

SPECIFICATION TEXT

Floorstanding WC pan washdown LAUFEN PRO, sanitary ceramic, for cistern
EN 997, EN 33, 5,9/3-l-flush, dimensions 360 x 700 x 480 mm
outlet horizontal, VARIO vertical 70 - 305 mm
back to wall, concealed fixation, lenght 700 mm, ceramic height 460 mm, 2 fixing holes
Special feature: concealed surfaces directing water are fully glazed throughout, closed water rim, vacuum checked
Further options / accessories: Surface refinement LCC (only white), 4 fixing holes, 2 fixing holes and lateral holes, cistern 82695.1, 82695.2, 82695.3, 82695.5, WC seat 89295.0, WC seat and cover 89195.0, 89295.1, 89395.2, WC seat and cover with automatic lowering 89195.1, 89395.8
Order no. 82495.5

TECHNICAL DRAWINGS / S 1 : 20

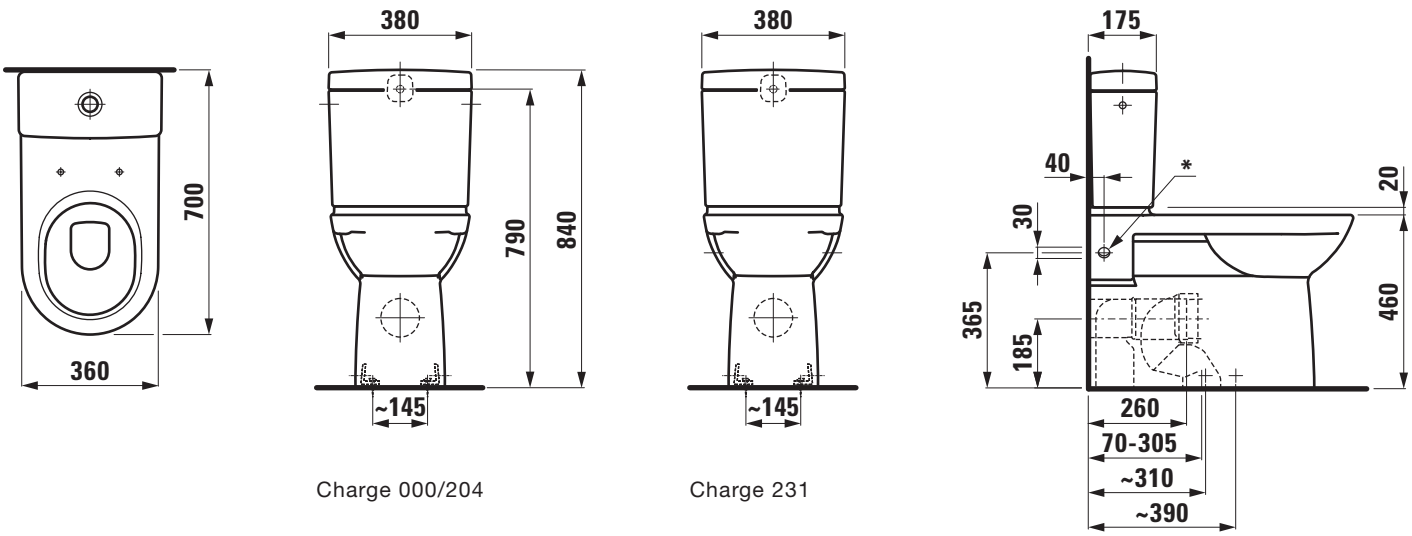

Charge 000/204

Charge 231

* = Only Charge 231 (Charge 000 without hole)

LAUFEN