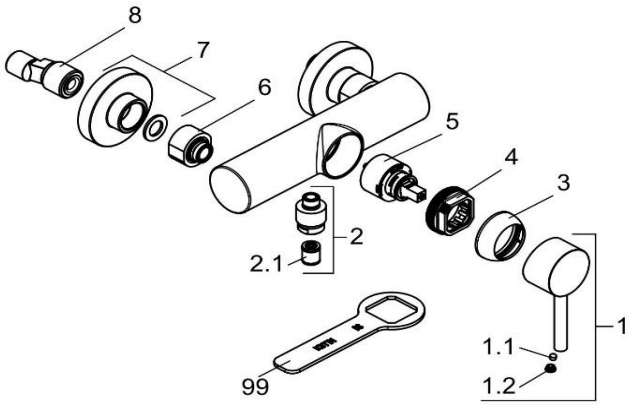


| 388310576 | | Brause-Einhandmischer DN 15 | single lever shower mixer DN 15 |
|---|---|---|---|
| 1 | 7373105-00 | HEBEL BOZZ | LEVER BOZZ |
| 1.1 | 92204601-00 | GEWINDESTIFT | GRUB SCREW |
| 1.2 | 93019705-00 | STOPFEN | PLUG |
| 2 | 7441805-00 | BRAUSEANSCHLUSSNIPPEL | SHOWER CONNECTING NIPPLE |
| 2.1 | 7510600-00 | RÜCKFLUSSVERHINDERER | BACK FLOW PREVENTER |
| 3 | 93018605-00 | ABDECKKAPPE | COVER CUP |
| 4 | 82311500-00 | SPANNSCHRAUBE | FASTENING SCREW |
| 5 | 7560500-00 | STEUEREINHEIT | CERAMIC CARTRIDGE |
| 6 | 7533505-00 | WANDARMATURENANSCHLUSS | WALL CONNECTING NIPPLE |
| 7 | 7374705-00 | ROSETTE | ESCUTCHEON |
| 8 | 7655100-00 | S - ANSCHLUSS | S - CONNECTIONS |
| 99 | 92907700-00 | SPANNSCHRAUBENSCHLÜSSEL | WRENCH FOR FASTENING SCREW |
| | | | |
| | | | |
| | | | |
| | | | |
| | | | |
| | | | |
| | | | |
| | | | |
| | | | |
| | | | |