Dynamic S

Description	Dynamic S Built-in Bath/Shower Mixer (Exposed Part)
Code	A42211EXP
Installation Type	Built-in
Working Pressure	0,5-10 Bar (Recommended 3-5 Bar)
Coating	Chrome
Colour	Chrome

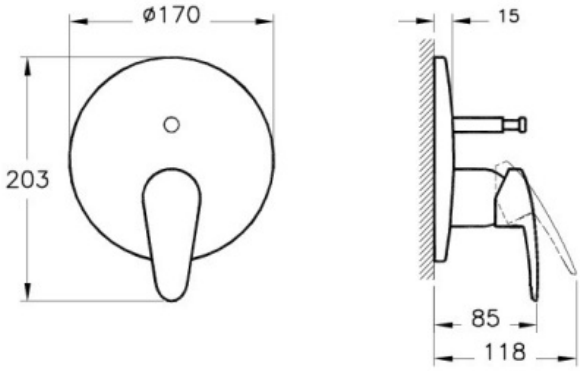

VitrA retains the right to change details about the products and technical specifications without prior notice.