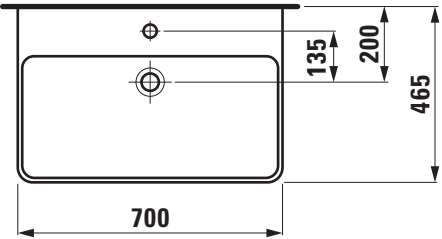

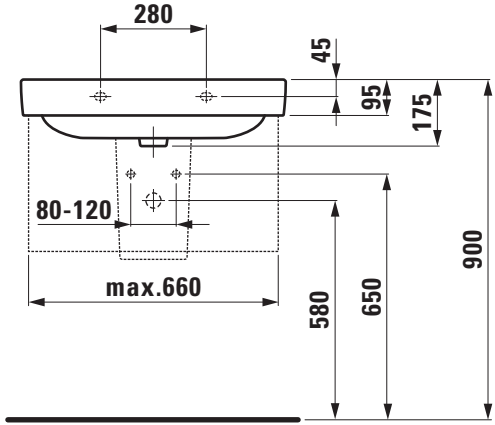

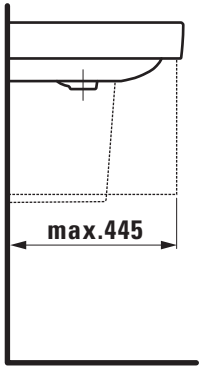

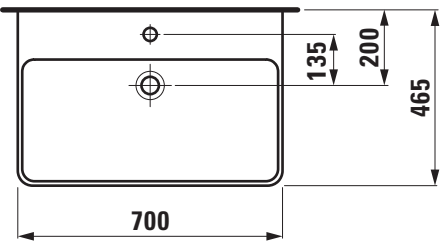

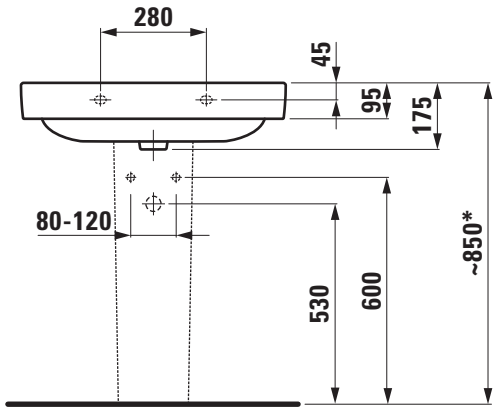

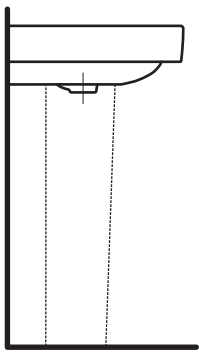

* = Effective height must be fixed according to the height of the pedestal.