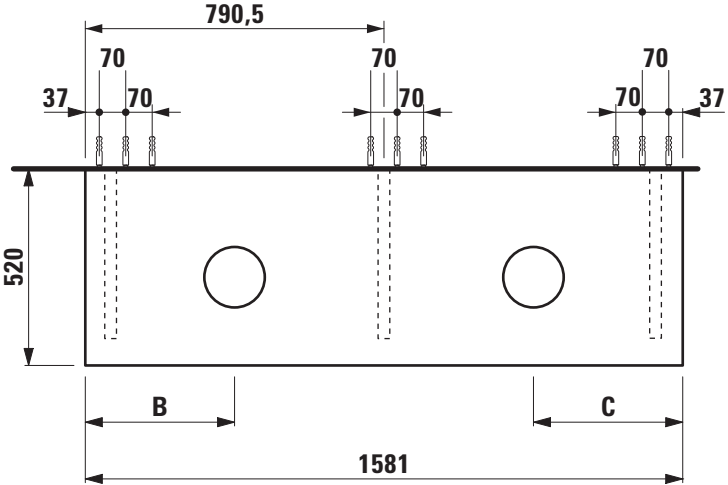


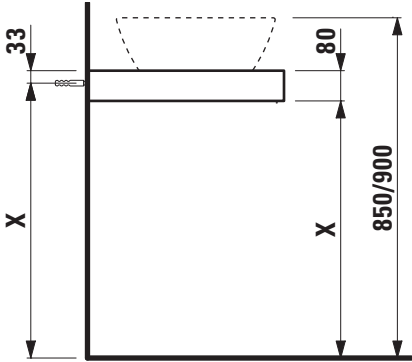


| B / mm | C / mm | Ceramic |
|---|---|---|
| 307 | 484 | Palomba 81680.2 |
| 346 | 445 | Palomba 81680.3 |
| 395 | 395 | all other from matrix for washtops Case |

X = The exact height must be set during installation.