AXOR

AXOR Montreux
4-hole rim mounted bath mixer with lever handles
Surfaces: **Chrome** Article Number: **16550000**

Description

product features

- consists of: 4-hole rim mounted bath mixer, hand shower, shower hose, shower holder
- projection 196 mm
- spray type mixer: normal spray
- spray type hand shower: RainAir (rain spray enriched with air)
- maximum pull-out length of hand shower: 1.10 m
- flow rate at 3 bar: 22 l/min
- min. operating pressure: 1 bar
- max. operating pressure: 10 bar
- scope of supply: handles, escutcheon, bath spout with diverter, non-return valve

Technology

Air Power

Quick Clean

Product image
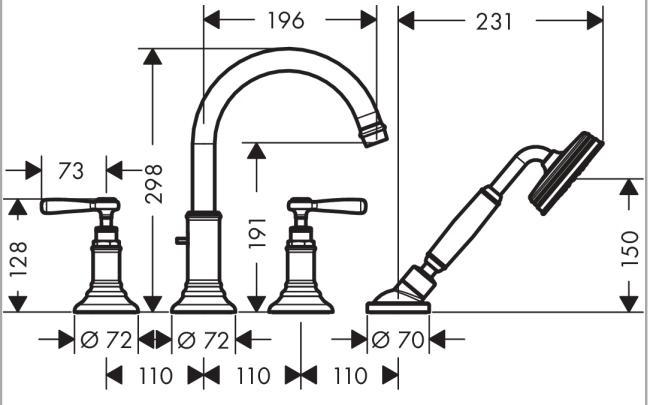
Scale drawing