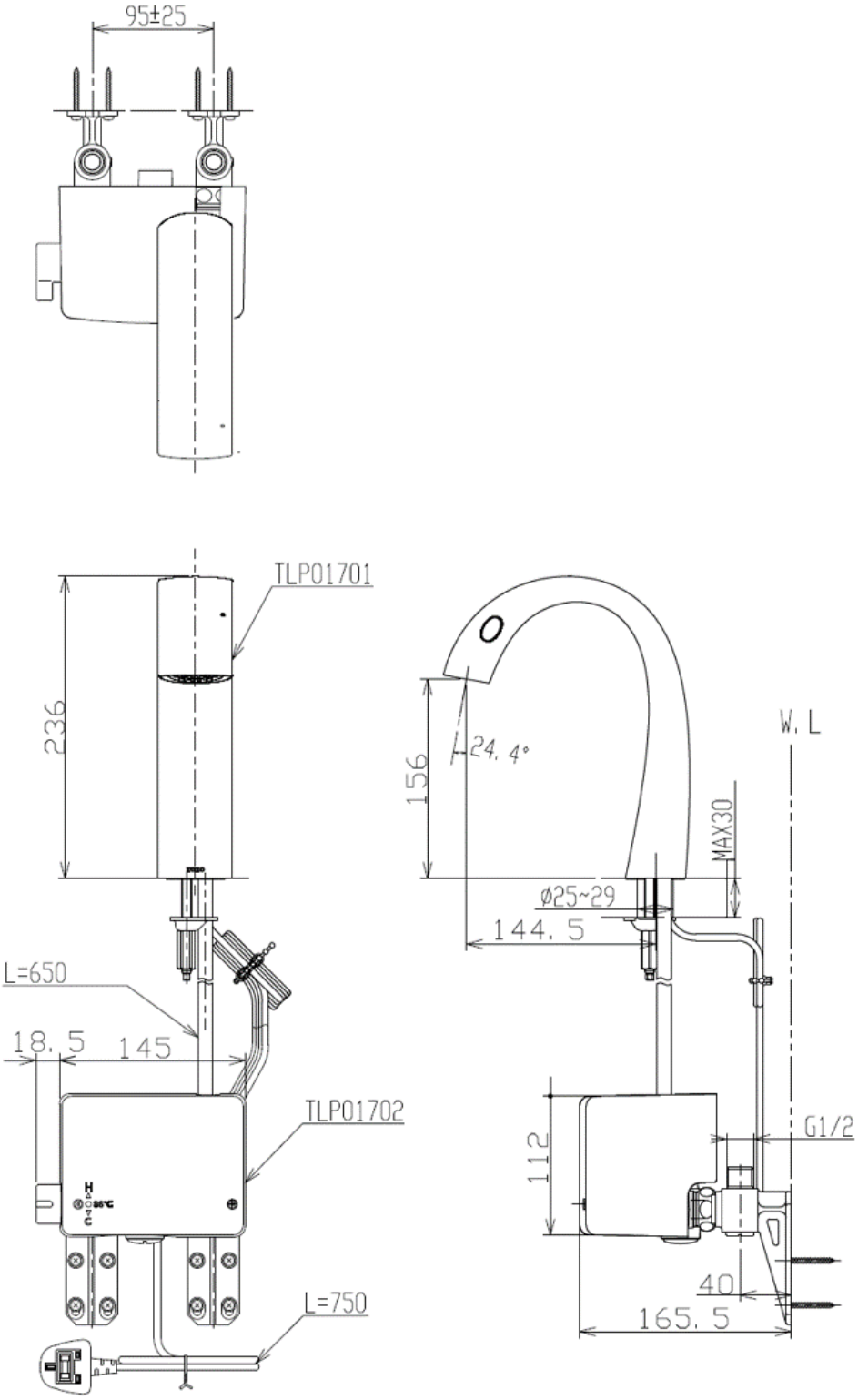

Designation			
FAUCETS TLP01701 + TLP01702			**TOTO**
Altered		Scale	
		Signed	
		Date	