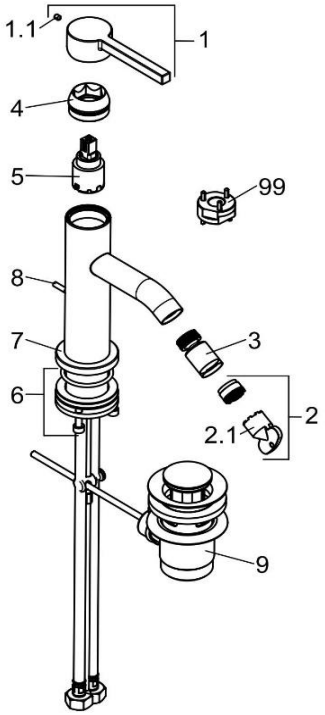

202160515		Bidet- Einhandmischer DN 15	single lever bidet mixer DN 15
1	7392005-00	HEBEL NOVA FONTE PURA	LEVER NOVA FONTE PURA
1.1	92105035-00	GEWINDESTIFT	GRUB SCREW
2	7509300-00	STRAHLREGLER	AERATOR
2.1	93104000-00	STRAHLREGLERSCHLÜSSEL	WRENCH FOR AERATOR
3	7303105-00	KUGELGELENK	BALL JOINT
4	92071305-00	ABDECKSCHRAUBE	COVER SCREW
5	7486800-00	STEUEREINHEIT	CERAMIC CARTRIDGE
6	7396600-00	BEFESTIGUNGSSATZ	MOUNTING KIT
7	7396505-00	ROSETTE	ESCUTCHEON
8	91701505-00	ZUGSTANGE	LIFT ROD
9	7654505-00	ABLAUFGARNITUR	POP UP WASTE
99	92916500-00	SPANNSCHRAUBENSCHLÜSSEL	WRENCH FOR FASTENING SCREW