COLLECTION

ringo-west

PRODUCT IMAGE

TECHNICAL DRAWING

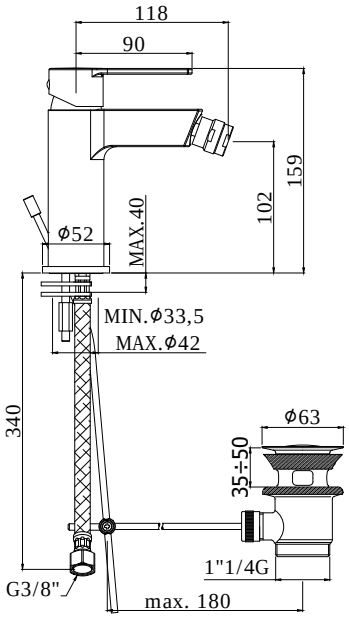

DESCRIPTION

Bidet mixer complete with:
- with swivel joint and aerator M24x1
- set of 2 stainless steel hoses 3/8"G

ART.

RIN 131 . . / WS 131 . .
without pop up waste

RIN 131K . . / WS 131K . .
with 1"1/4G Clic-Clac press top waste

RIN 135 . . / WS 135 . .
with 1"1/4G pop up waste

FINISHES

RIN
CR - cromo
BO - bianco opaco
NO - nero opaco

WS
CR - cromo

DOCUMENTATION

INSTALLATION
INSTRUCTIONS

PRODUCT PAGE

www.paffoni.it