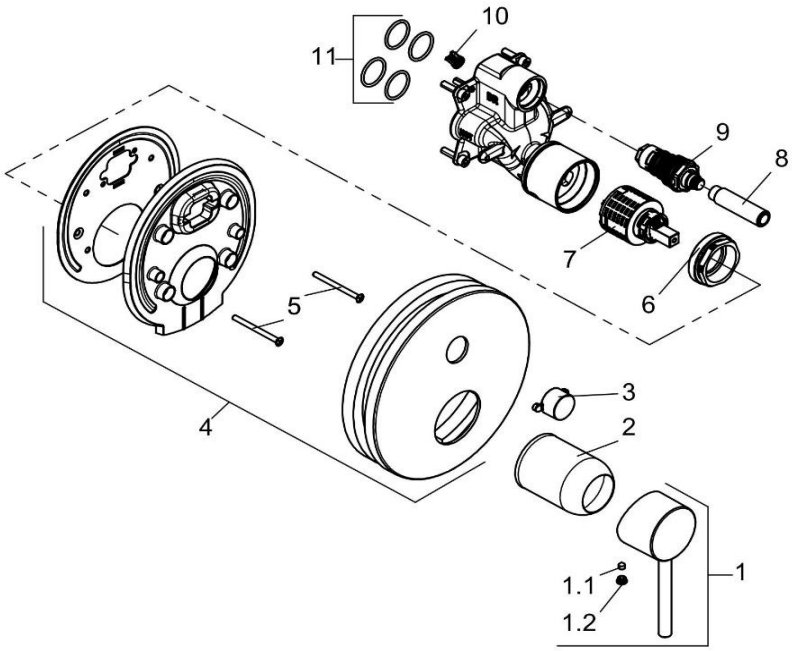


| 386595376 | | Unterputz-Wannenfüll- und Brause-Einhandmischer | concealed single lever bath and shower mixer safe |
|---|---|---|---|
| 1 | 7373053-00 | HEBEL BOZZ | LEVER BOZZ |
| 1.1 | 92204601-00 | GEWINDESTIFT | GRUB SCREW |
| 1.2 | 93019753-00 | STOPFEN | PLUG |
| 2 | 92059153-00 | ABDECKHÜLSE | COVER SLEEVE |
| 3 | 93130553-00 | DRUCKTASTEN RUND | PUSH BUTTON ROUND |
| 4 | 7391753-00 | | |
| 5 | 7446335-00 | SCHRAUBEN SET | SCREW SET |
| 6 | 92266837-00 | SPANNSCHRAUBE | FASTENING SCREW |
| 7 | 7685600-00 | STEUEREINHEIT | CERAMIC CARTRIDGE |
| 8 | 93130700-00 | GEWINDEHÜLSE | THREADED SLEEVE |
| 9 | 7726900-00 | UMSTELLER | DIVERTER |
| 10 | 7390500-00 | RÜCKFLUSSVERHINDERER | BACK FLOW PREVENTER |
| 11 | 7301100-00 | DICHTUNGSSATZ | SEALING SET |
| | | | |
| | | | |
| | | | |
| | | | |
| | | | |
| | | | |
| | | | |
| | | | |
| | | | |

KLUDI