AXOR

AXOR Citterio M
2-hole single lever kitchen mixer 220 with pull-out spray
Surfaces: **Chrome** Article Number: **34822000**

Description

product features

- ComfortZone 220
- swivel range adjustable in 2 steps to 110° or 150°
- normal and spray jet
- lockable shower spray, spray returns through pressing spray diverter
- MagFit magnetic shower support
- quick connect hose
- maximum flow rate at 3 bar: 9.5 l/min
- suitable for continuous flow water heaters
- scope of supply: 2-hole single lever kitchen mixer, connection hoses, fixing set, mounting material, assembly instruction

Technology

Product image
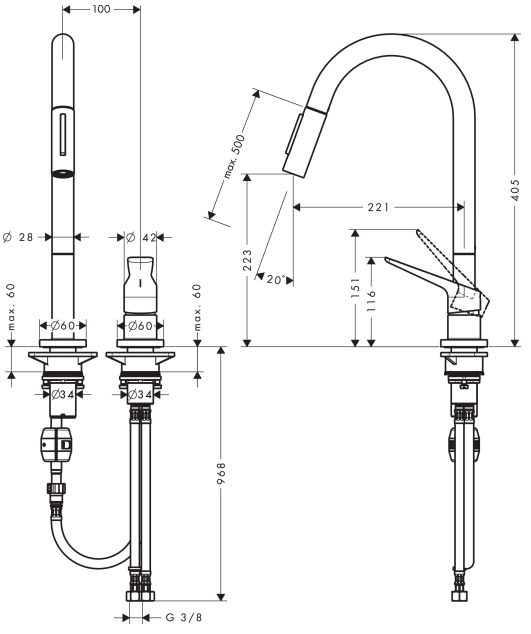
Scale drawing